Mating Connector Hardware

DESCRIPTION	P/N	QUANTITY
Deutsch Connector	DTM06-6S	1
Deutsch Wedgelock	WM6S	1
Deutsch Terminal	0462-201-20141	4

DTM04-6P

PIN	Func.	Color
1	GND	Black
2	BAT+	Red
3	CAN HI	Yellow
4	CAN LO	Green
5	N/A	N/A
6	N/A	N/A

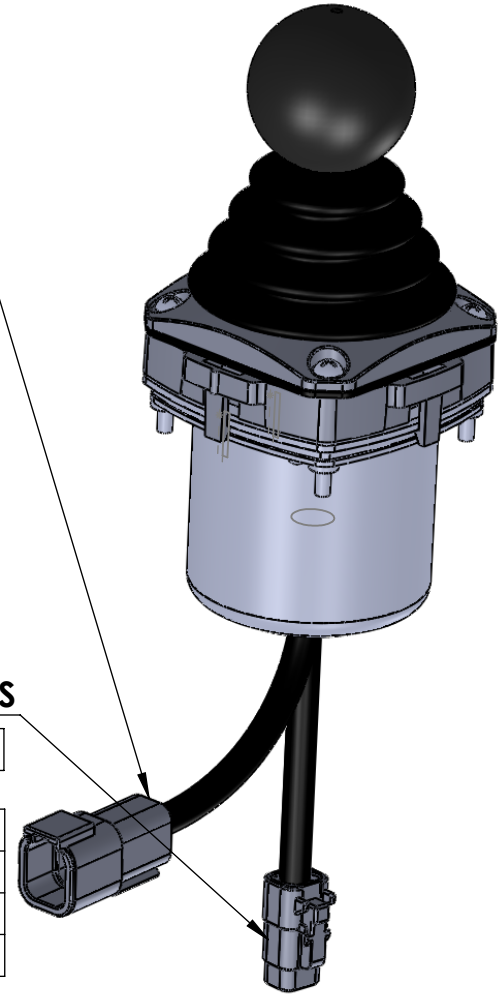

Mating Connector Hardware

DESCRIPTION	P/N	QUANTITY
Deutsch Connector	DTM04-4P	1
Deutsch Wedgelock	WM4P	1
Deutsch Terminal	0460-202-20141	3

DTM06-4S

PIN	Func.	Color
1	BAT+	Red
2	PLAT DN (BTN 2)	White
3	PLAT UP (BTN 1)	Blue
4	N/A	N/A

REVISION CHANGES	DATE
Key added to lock one axis	5/3/2018

APPLICATION

UNLESS OTHERWISE SPECIFIED:

DIMENSIONS ARE IN INCHES
TOLERANCES:
FRACTIONAL ± 0.25"

	NAME	DATE
DRAWN	JS	4/17/18
MECH. CHECKED 1	N/A	N/A
MECH. CHECKED 2	N/A	N/A
ELEC. CHECKED 1		
ELEC. CHECKED 2		

COMMENTS:

621 Technologies

TITLE:
KEYED SINGLE AXIS JOYSTICK CAN J1939

SIZE	P/N	REV
A	**AJSC-J2A1-K-001** (E-one P#1080272-001)	1A0

PROPRIETARY AND CONFIDENTIAL

THE INFORMATION CONTAINED IN THIS DRAWING IS THE SOLE PROPERTY OF 621 TECHNOLOGIES. ANY REPRODUCTION IN PART OR AS A WHOLE WITHOUT THE WRITTEN PERMISSION OF 621 TECHNOLOGIES IS PROHIBITED.

5 4 3 2 1